FULL HD 1080P

ROI

CORRIDOR MODE

AirGoggle™ NVC880MP2

2MP IR Mini Bullet IP Camera

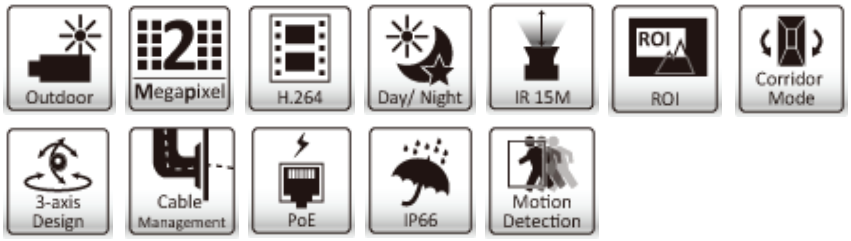

NVC880MP2 2MP outdoor motorized dome can keep consistent visibility all the time, is a perfect surveillance solution for monitoring 24x7 outdoor activities.
This NVC880MP2 outdoor dome is extremely comprehensive, can work in almost any location, including banks, residential or public area. It features a motorized lens for remote focus and zoon control, the installer/user can remote control the focal length and precisely adjust the camera focus. This made NVC880MP2 hassle-free installation and maintenance.

Besides, NVC880MP2 comes with AdaptiveIR and P-iris to provide great clarity image all day. Compared to traditional IR, Smart IR can automatically adjusting IR output in response to the distance of the object to avoid over-exposure. P-iris can provide a clear image with better contrast and depth of field. That's why NVC880MP2 can overcome variation light condition to have clear image.

Features

- Full HD 1080p
- 1/2.8" CMOS sensor
- H.264 and Motion JPEG compression
- 25 fps at 1920 x 1080
- 3.6 mm, F1.8, Fixed lens
- True day & night with automatic removable
- IR-cut filter
- Smart feature: Corridor Mode, ROI
- IR 15m range
- RTC with built-in battery
- Motion detection
- IP66 weatherproof
- Screwless 3-axis angle adjustment for easy
- Installation on walll or ceiling
- SSL v3 advanced HTTPS encryption
- Full support for Firefox, Safari and Mac OS
- Supports Samba network storage
- Multi-lingual user interface
- Free 32-channel NVR software

ROI

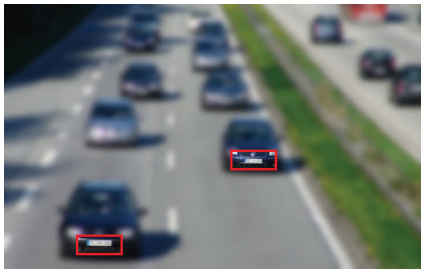

Applications

1. Education
2. Residential
3. Retail

Corridor Mode

Nomal

Corridor Mode

All above images were taken for the purpose of these explanations; actual images may differ. (01/16)

Camera

Image sensor	1/2.8" CMOS sensor
Lens	3.6 mm, F1.8
Angle of view	70° horizontal
Min illumination	0.05 lux @ F1.8 (color) 0.005 lux (B/W) 0 lux (IR LED on)
IR working distance	15m effective range
Day/Night function	Mechanical IR cut filter Light sensor

Video

Video compression	Motion JPEG H.264 baseline/ main profile/high profile
Resolutions	Motion JPEG: 5 resolutions from 1920 x 1080 to 320 x 240 via API 3 resolutions from 640 x 480 to 320 x 240 via API H.264: 5 resolutions from 1920 x 1080 to 320 x 240 via API 3 resolutions from 640 x 480 to 320 x 240 via API
Frame rate	Motion JPEG: up to 25 fps at 1920 x 1080 H.264: up to 25 fps at 1920 x 1080
	Simultaneous Motion JPEG, H.264 Controllable frame rate and bandwidth Support unicast (Real Time Streaming Protocol)
Image settings	Rotation: mirror, flip, mirror+ flip WDR enhanced Brightness, contrast, saturation, sharpness Overlay capabilities: Time stamp, Title, Title & Time stamp Privacy mask

Network

Security	Multiple user access levels with password protection, HTTPS encryption
	Bonjour, TCP/ IP, DHCP, DNS, DynDNS, PPPoE, ARP, ICMP, FTP, SMTP, NTP, UPnP, RTSP, RTP, RTCP, HTTP, HTTPS, SSL, TCP, UDP
Users	5 simultaneous users

Alarm and Event Support

Alarm and event	Input: motion detection, tampering detection, periodical Output: network storage, FTP, SMTP, HTTP event Pre and post event image

System

	RJ-45 Ethernet 10/ 100 Base-T(with PoE) Reset push buttom DC 12V power supply

General

Casing	Metal housing
Housing	IP66 rated weatherproof housing
Power	12V DC, 1A Power comsumption: Max. 14W PoE(Power over Ethernet) built-in IEEE 802.3af
Operating conditions	-10° ~ 50°C
Minimum web browsing requirement	Pentium 2.8GHz (or equivalent AMD) 256MB RAM graphic cards (or equivalent on-board graphic cards) 1G RAM Windows 2008, XP, Vista or Windows 7 Mac OS Leopard 10.5 or later
Dimensions (HxWxD)	φ66 x 165 x 89mm, incl. bracket (φ2.6" x 6.5" x 3.5")
Weight	500g excl. power supply
Included accessories	Quick installation guide, CD (Camera Installation Tool, Video Management Tool, User Manuals, Camera Language Packs) mounting and connector kits
Certification	CE, FCC, RoHS

Part Names and Functions

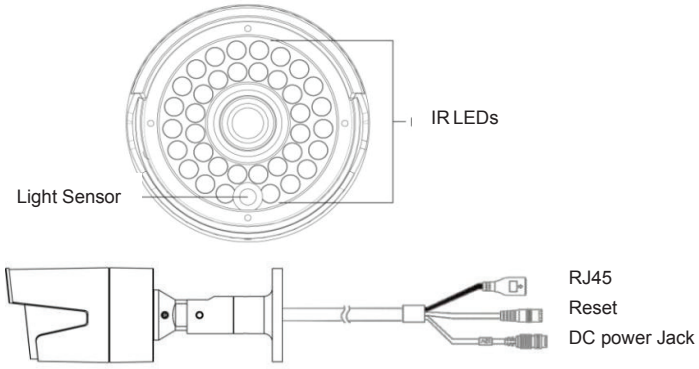

Dimensions

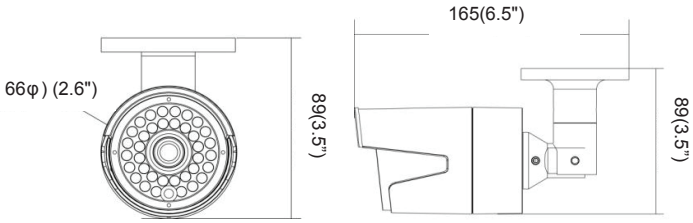

Unit: mm (inches)

InscapeData
THE LEADING OUTDOOR NETWORK APPLIANCE COMPANY
Total Turnkey Solutions for Outdoor PoE, Wired/Wireless, and IP Video Applications

Product Information Online: http://www.inscapedata.com/bullet-cameras.htm

Corporate Headquarters
1620 Oakland Road, Suite D101, San Jose, CA 95131, U.S.A.
PHONE +1.408.392.9800 **FAX** +1.408.392.9812
EMAIL sales@inscapedata.com

© Copyright 2011, Inscape Data Corporation, All Rights Reserved. LinkPower, AirEther, AirGoogle and Inscape Data are trademarks of Inscape Data Corporation
Disclaimer: While every effort is made to ensure the information given is accurate, Inscape Data Corporation does not accept liability for any errors or mistakes which may arise. All specifications are subject to change without notice.

Accessories

ID000112

IP66 Junction Box

It is an innovative junction box for bullet cameras and enclosures with any custom holes are available, which is also allowing RJ45 connector goes through directly.

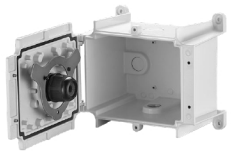

Certificated: IP66 -- ROHS – IK10

Technical Specifications

Construction	Die-Cast Alloy
Coating	White powder coat
Weight	1,300 G
Max. Load	30KG
Packing	12pcs/ctn
Operating temp.	-40°C ~ 60°C
Suitable Hole	Any custom holes available
Cable Range	4.5~5.5mm; 5.5~7mm ; 9.5~10.5mm

Dimensions

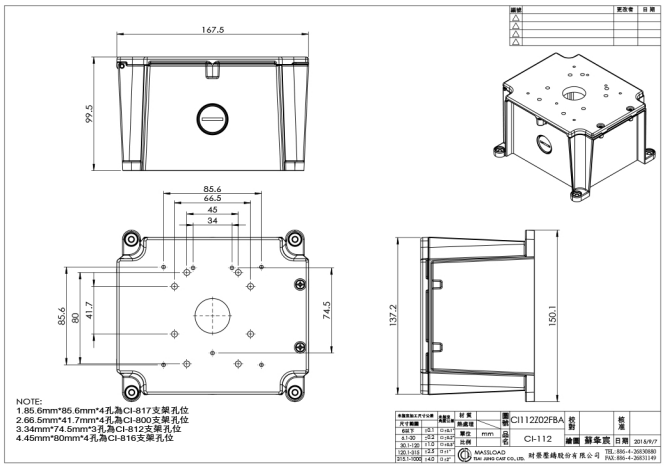

ID000815

Pole Mount Bracket

Specifications	
Item NO.	CI-815 Pole Mount Bracket
Construction	Die Cast Al-alloy Material
Bracket Dimensions	277.4 L x 75 H x 168.1 W mm
Coating	Beige and white epoxy powder coating
Max Load.	30 KG
Packing	4 pcs/ ctn
Weight	2,400 G

Application Use
For Pole
Fit for different type of camera housing bracket
With Four Stainless tube thread and screws
Suitable for poles with diameter 70 mm to 120mm & 120mm to 230mm

Certification
RoHS Compliant