InscapeData

Total PoE Solutions for Wired/Wireless, IP Video, & Smart City Applications

Key Features & Benefits

- Supply 12 or 24V DC power to IP network surveillance cameras and IR LED illuminators through Cat5 Ethernet cable (PoE)
- 2x 10/100/1000Mbps RJ45 ports, 1x high power PoE port, great for high-speed dome cameras
- Support network port, lightning-proof power input port (the secondary lightning protection)
- Support IEEE802.3bt high power PoE standard, compatible with IEEE802.3af / IEEE802.3at standards
- Splitter output power is 60W, the total power is up to 75W
- Input voltage: 56V; Output: DC12V or 24V
- No fans, natural cooling, small and exquisite, no noise design, suitable for desktop or wall

LinkPower™ GIGABIT PS1060 Hi-Power PoE Splitter

LinkPower™ t{1060 Gigabit Hi-Power 60W PoE Splitter

Inscape Data's LinkPower™ PS1060 ǎλyƎtŜ LJ2NJǘ млкмллкмллл a t29 (Power over Ethernet) Splitter λǎ l· Gλ∃l·ōλǘ 60W 12 or 24V DC t29 splitter based on IEEE802.3bt high power PoE standard, and can be backward compatible with IEEE 802.3af/ IEEE802.3at PoE standard. The maximum output power is 60W, the total power can be up to 75W. This high power PoE splitter can provide the maximum output power that must match with high power PoE switch or power injector, the output power will be less than 25.5W if only matched with IEEE802.3af/IEEE802.3at standard PoE switch.

For the cost saving and more flexible power management, the LinkPower™ PS1060 is an ideal high power PoE Splitter that provide a simple and economical solution for high performance Ethernet PoE power supply and data communication. It is easy to use and install, great performance, and cost-effective, and it is an ideal choice for customer to improve the installation efficiency and flexibility.

Applications

- *Smart City*
- *IP Video Surveillance*
- *High-power IR LED illuminators*
- *Border Security Surveillance*
- *Municipal Network*
- *Energy & Refineries*
- *Hospitality Network*
- *Hotel Resort Network*
- *Hotspot Integra on*
- *VOIP Service*
- *Traffic Monitoring*

System Configurations

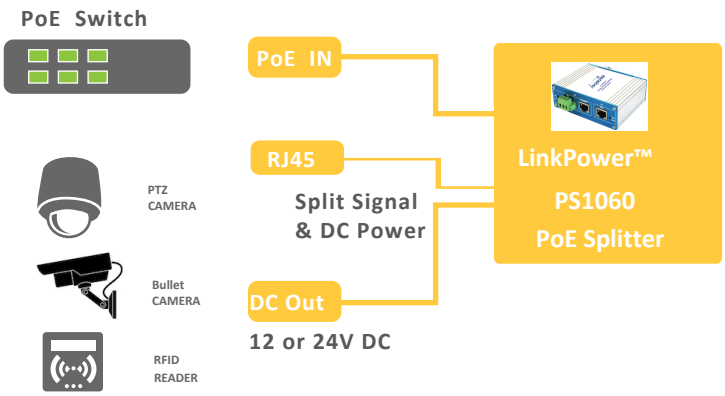

Product Layout

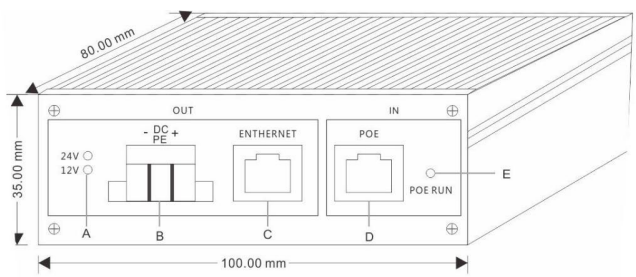

A. 12V/24V DC Output Status Indicator
D. PoE Input Port
C. Ethernet Output Port
E. PoE Input Indicator Light

[1]Voltage Status can be 12V DC, 24V DC, 48V DC, or 802.3af depending on the models.
All above images were taken for the purpose of these explanations; actual images may differ. (03/2010-T)

Product Name	10/100/100M Single Port Super High Power Dual Output PoE Splitter
Product Model	PS1060
Connector Type	2x 10/100/1000M copper cable RJ45 ports
PoE Power Supply Type	PoE power supply is four line pairs of twisted pair, the positive power supply side is 1/2 or 4/5 line pair, the negative power supply side is 3/6 or 7/8 line pair
Performance Specifications	Output: DC24V or DC 12V
	Input voltage: 56V
	Working Speed:10/100/1000Mbps
	MTBF: 190,000 hours (about 21 years)
Standards	Support 802.3bt high power PoE standard, compatible with IEEE802.3af / IEEE802.3at standard
LEDs Indicator	PoE working status
Dimension	LxWxH: 100x80x35mm
POE Standard	IEEE802.3bt
Power	The total power: 75W
	PoE Port Output Power: 70W
Working Environment	Working Temperature: 0°～ 55°C, Storage Temperature: -20°～ 75°C
	Working Humidity: 10%～90%, non-condensing, Storage humidity:10%～95%,non-condensing
Quality Specification	CE mark, commercial, FCC Part 15 Class B, RoHS
	3-year warranty

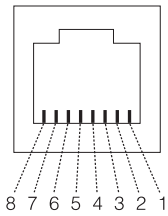

PD and PSE Eight-Pin RJ45 Modular Jack

PSE Pinout			PD Pinout	
RJ45 Conductor Pin#	802.3af Mode A	802.3af Mode B/ Passive PoE*	802.3af Mode A	802.3af Mode B/ Passive PoE*
1	Rx, V+	Rx	TX+, V+	TX+
2	Rx, V+	Rx	TX-, V+	TX-
3	Tx, V-	Tx	RX+, V-	RX+
4	Spare	V+		V+
5	Spare	V+		V+
6	Tx, V-	Tx	RX-, V-	RX-
7	Spare	V-		V-
8	Spare	V-		V-

PACKAGE CONTENTS

- **PS1060** (1)
- User Manual (1)
- 3-Year Warranty Sheet (1)

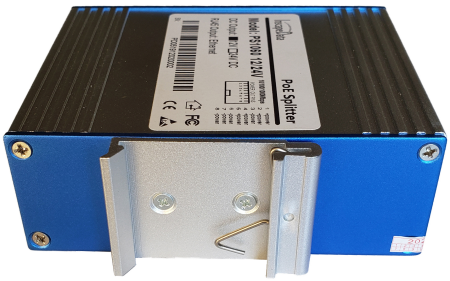

InscapeData

United States Headquarters 1620 Oakland Road, Suite D101, CA 95131, U.S.A.
PHONE +1.408.392.9800 FAX +1.408.392.9812 EMAIL sales@inscapedata.com

Revision 1.0

© Copyright 2018, Inscape Data Corporation, All Rights Reserved. LinkPower, AirEther, AirGoogle and Inscape Data are trademarks of Inscape Data Corporation
Disclaimer: While every effort is made to ensure the information given is accurate, Inscape Data Corporation does not accept liability for any errors or mistakes which may arise. All specifications are subject to change without notice.